T300 MINI OPERATOR

***MANUAL** HANDLE OPERATORS*

Applications

Manual Window Control

Colours

White (RAL 9010)
Black (RAL 9005)
Grey (RAL 9006)

T300 MINI OPERATOR

- Compact metal cased operator for use on single or light multiple window control.
- Ideal for use where 380mm opening stroke is required.
- Supplied complete with T275 handle and fixings.

TECHNICAL DATA:
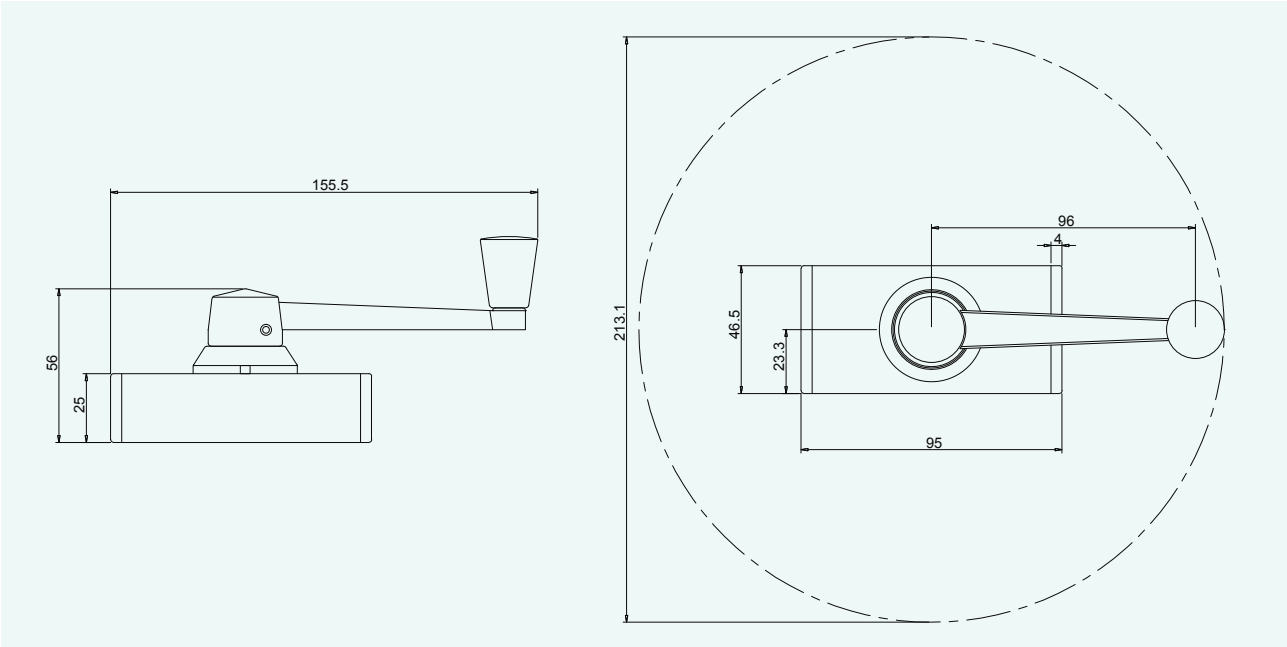
CODE	T300
OPENING STROKE	0 - 380mm
COLOURS	WHITE, BLACK, GREY
COMPATIBLE WITH	T100, T150, T175, T190